IF IN DOUBT PL ASK!

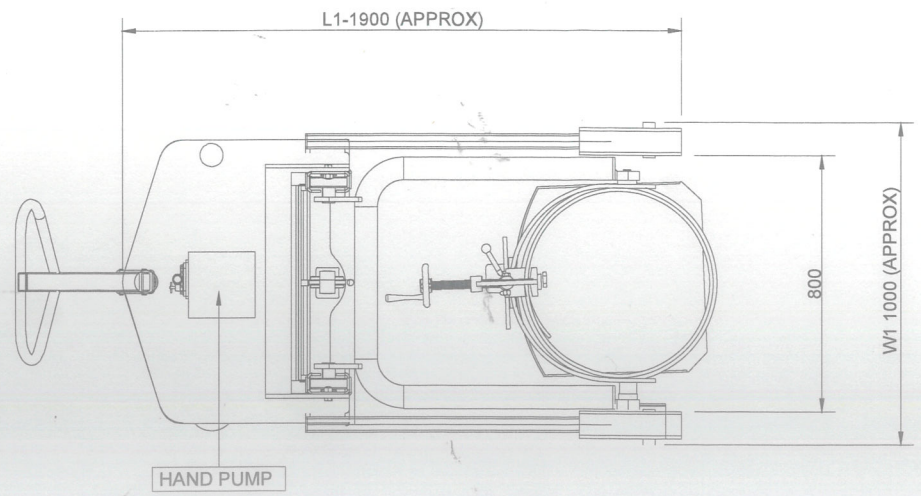


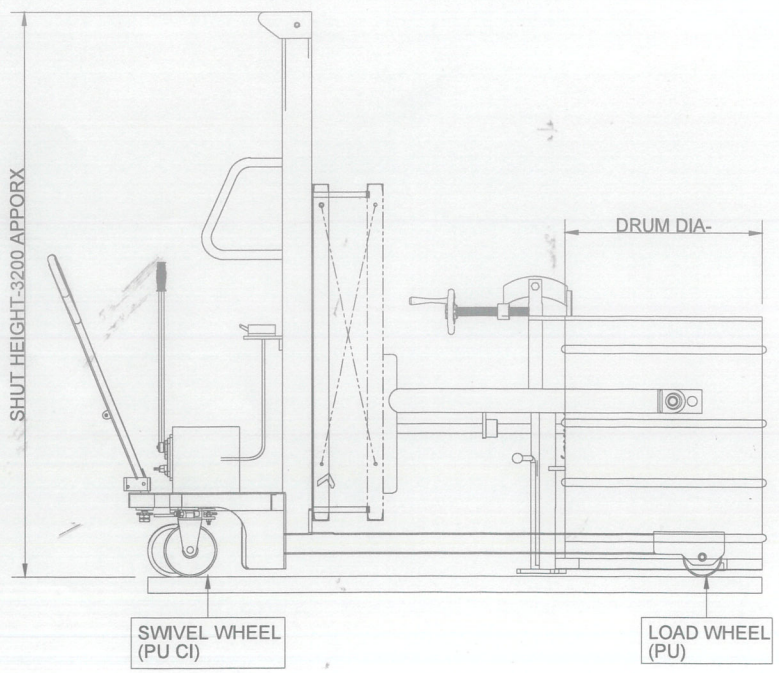


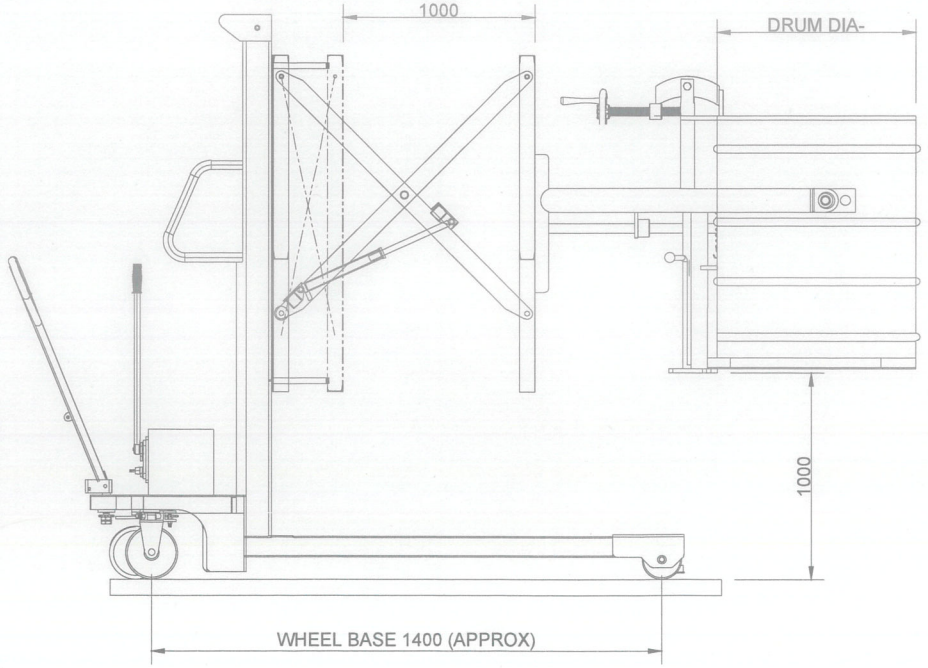


| SR | PARAMETERS | SYMBOL | SPECIFICATION |
|---|---|---|---|
| 1 | LIFTING CAPACITY | C | 250 KG |
| 2 | MIN HT. OF DRUM | H1 | 450 |
| 3 | MAX HT. OF DRUM | H2 | 1450 |
| 4 | OVERALL LENGTH (APPROX) | L1 | 1900 |
| 5 | OVERALL WIDTH (APPROX) | W1 | 1000 |
| 6 | SHUT HEIGHT | | 3200 |
| 7 | LIFT MOC | M.S | |
| | | GOLDEN YELLOW PAINT | |
| 8 | LIFTING SPEED | 6-10 MM / STROKE | |
| 9 | LOAD CONSIDERED | UNIFORMLY DISTRIBUTED | |
| 10 | A-THIS IS SCHEMATIC REPRESENTATION ONLY, ACTUAL MACHINE MAY VARY SLIGHTLY. | | |
| 11 | DRUM CLAMP WITH BELT AND BRACKET STD ASSLY FOR STD DRUM M.S. / PLASTIC PVC | | |
| 12 | STRICTLY AVOIDE METAL TO METAL FRICTION | | |
| 13 | DRUM SIZE | DIA- TO BE CONFIRM BY CUSTOMER | |
| | | HEIGHT- TO BE CONFIRM BY CUSTOMER | |

Sigma Aldrich Chemicals Pvt. Ltd.
Bangalore
560 100

05/02/2026

| | | | |
|---|---|---|---|
| CUSTOMER-MECRK | | ALL DIMENSIONS ARE IN mm. | A4 |
| JOIST-O-MECH (SINCE-1987) | | CO.NO | PRODUCT.NO. |
| | | DRAWN | S.S.P 17.02.2026 |
| | | CHECKED | R.V.A 17.02.2026 |
| | | APPROVED | PRATIK 17.02.2026 |
| TITLE- ELE.HYD.DRUM LIFTER | | | SCALE : NTS |
| DRAWING NO. | JAN26-J12-20 | SHEET NO. | 1OF1 REV. R0 |